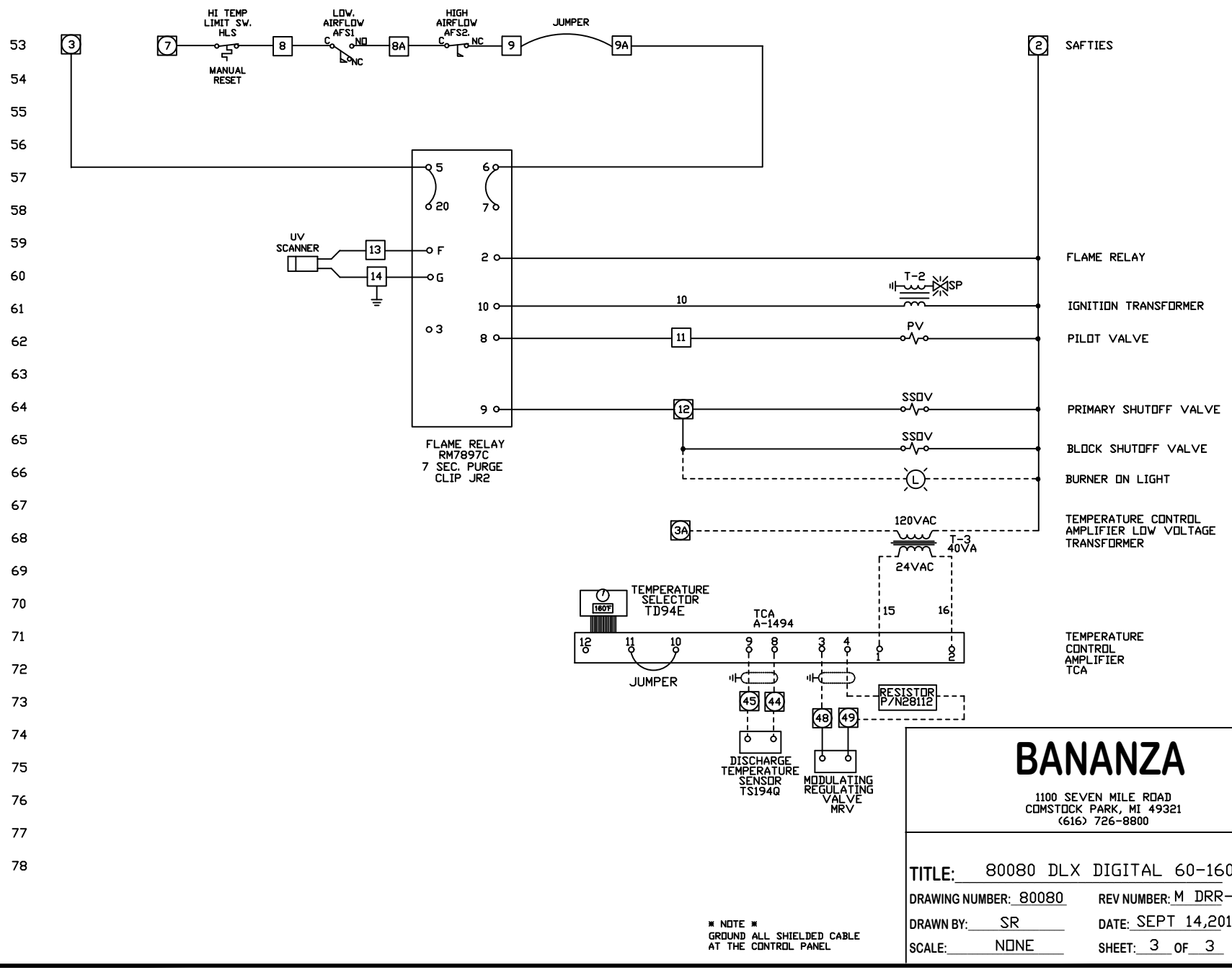

* NOTE *
GROUND ALL SHIELDED CABLE AT THE CONTROL PANEL

BANANZA

1100 SEVEN MILE ROAD
COMSTOCK PARK, MI 49321
(616) 726-8800

TITLE: 80080 DLX DIGITAL 60-160

DRAWING NUMBER: 80080 REV NUMBER: M DRR-1895

DRAWN BY: SR DATE: SEPT 14,2015

SCALE: NONE SHEET: 3 OF 3